BILL NO. S-87-04-36

SPECIAL ORDINANCE NO. S-9687

AN ORDINANCE approving the awarding of Reference #3079, by the City of Fort Wayne, Indiana, by and through its Department of Purchasing and Midwest Tile and Concrete, for the Water Pollution Control Maintenance Department.

NOW, THEREFORE, BE IT ORDAINED BY THE COMMON COUNCIL OF THE CITY OF FORT WAYNE, INDIANA:

SECTION 1. That Reference #3079, between the City of Fort Wayne, by and through its Department of Purchasing and Midwest Tile and Concrete, for the Water Pollution Control Maintenance Department, respectfully for:

the purchase of Standard Manhole Castings for the Water Pollution Control Maintenance Department;

involving an approximate total cost of Sixteen Thousand Three Hundred Twenty-Nine and No/100 Dollars ($16,329.00±), all as more particularly set forth in said Reference #3079, which is on file in the Office of the Department of Purchasing, and is by reference incorporated herein, made a part hereof, and is hereby in all things ratified, confirmed and approved.

SECTION 2. That this Ordinance shall be in full force and effect from and after its passage and any and all necessary approval by the Mayor.

Charles B. Redd
Councilmember

APPROVED AS TO FORM
AND LEGALITY

Bruce O. Boxberger, City Attorney

Read the first time in full and on motion by Redd, seconded by Eisbart, and duly adopted, read the second time by title and referred to the Committee City Utilities (and the City Plan Commission for recommendation) and Public Hearing to be held after due legal notice, at the Council Chambers, City-County Building, Fort Wayne, Indiana, on _____, the _____ day of _____, 19____, at _____ o'clock ____.M.,E.S.T.

DATE: 4-14-87

Sandra E. Kennedy
SANDRA E. KENNEDY, CITY CLERK

Read the third time in full and on motion by Redd, seconded by Eisbart, and duly adopted, placed on its passage. PASSED ~~(LOST)~~ by the following vote:

	AYES	NAYS	ABSTAINED	ABSENT	TO-WIT:
TOTAL VOTES	9				
BRADBURY	✓				
BURNS	✓				
EISBART	✓				
GiaQUINTA	✓				
HENRY	✓				
REDD	✓				
SCHMIDT	✓				
STIER	✓				
TALARICO	✓				

DATE: 4-28-87

Sandra E. Kennedy
SANDRA E. KENNEDY, CITY CLERK

Passed and adopted by the Common Council of the City of Fort Wayne, Indiana, as ~~(ANNEXATION)~~ ~~(APPROPRIATION)~~ ~~(GENERAL)~~ (SPECIAL) ~~(ZONING MAP)~~ ORDINANCE (RESOLUTION) NO. S-96-87 on the 28th day of April, 19 87,

ATTEST:
Sandra E. Kennedy
SANDRA E. KENNEDY, CITY CLERK

(SEAL)
Mark E. GiaQuinta
PRESIDING OFFICER

Presented by me to the Mayor of the City of Fort Wayne, Indiana, on the 29th day of April, 19 87, at the hour of 11:30 o'clock A.M.,E.S.T.

Sandra E. Kennedy
SANDRA E. KENNEDY, CITY CLERK

Approved and signed by me this 1st day of May, 19 87, at the hour of 4:00 o'clock P.M.,E.S.T.

WIN MOSES, JR., MAYOR

QUOTE 3079 - WPCM - MARCH 20, 1987

QTY	DESCRIPTION	MIDWEST TILE		NEENAH FOUNDRY	UNDERGROUND		TREATY COMPANY	
50+	CASTING - CATTCH BASIN W/BACK	$114.40	$5,720.00	NO/QUOTE	$119.70	$5,985.00	$120.05	$9,003.75
10-25	CASTING - MANHOLE, BOLT DOWN	$115.36	$2,884.00		$109.20	$2,730.00	$109.52	$2,738.00
50 - 100	CASTING - MAN HOLE, STANDARD TYPE A LID	$103.00	$7,725.00		$98.70	$7,402.50	$98.99	$7,424.25
		GASKET INC.			$4.25 GASKET???	$318.75	(GASKET ?? A4.22	x 75 = 316.50
			$16,329.00			$16,117.50		$19,166.00
						16,436.25		19,482.50
					DEL. 2 WKS FOB FT WAYNE		DEL. 30 DAYS FOB FT WAYNE	

Call Underground
specs on their two
low to go over
w/ Maran.

98.70 ÷
4.25

FORM #FWPO-2

REQUEST FOR QUOTATION
City of Fort Wayne
DEPARTMENT OF PURCHASES
NUMBER ONE EAST MAIN STREET ROOM 350
FORT WAYNE, IN 46802

PLEASE INDICATE THIS NUMBER ON ALL CORRESPONDENCE

QUOTE NO. 3079

DATE OF REQUEST			WILL BE RECEIVED AT THIS OFFICE UNTIL	PAGE
03/06/87	X☐ Quotations	☐ Sealed Bids	▶ 03/20/87 AT 4:00 PM	

TO

UNDERGROUND
617 LEY ROAD
FORT WAYNE, IN 46825

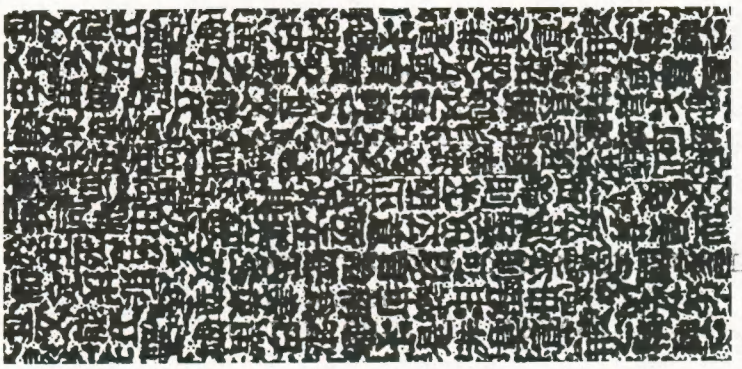

The Contractor and his sub-contractors, if any, shall not discriminate against any employee or applicant for employment, to be employed in the performance of this contract, with respect to his hire, tenure, conditions or privileges of employment or any matter directly or indirectly related to employment, because of his race, color, religion, national origin or ancestry. Breach of this covenant may be regarded as a material breach of the contract.

REQUEST FOR QUOTATION
THIS IS NOT AN ORDER

PLEASE QUOTE BELOW LOWEST PRICES, WHICH **MUST INCLUDE ALL DELIVERY CHARGES (INCLUDING FREIGHT, PARCEL POST AND EXPRESS)** UNLESS OTHERWISE SPECIFIED, FOR PURCHASING MERCHANDISE OR SERVICE DESCRIBED BELOW.

QUOTATIONS WILL BE OPENED IN ACCORDANCE TO RULES AND REGULATIONS ON THE REVERSE SIDE OF THIS SHEET.
RESPECTFULLY,

QUANTITY	UNIT	DESCRIPTION	UNIT PRICE	TOTAL
		PER THE ATTACHED SPECIFICATIONS, PLEASE QUOTE ON THE MATERIAL FOR THE WATER POLLUTION CONTROL MAINTENANCE DEPARTMENT.		
		THIS IS CONSIDERED A SEALED QUOTE. IT MUST BE RETURNED SEALED IN THE ENVELOPE ENCLOSED NO LATER THAN THE DATE AND TIME SPECIFIED ABOVE. ALL OTHERS WILL BE RETURNED UNOPENED TO SENDER.		
50 +/-	EA	CATCH BASIN CASTINGS WITH BACK	119.70	5,985.00
25 +/-	EA	BOLT DOWN, MANHOLE CASTINGS	109.20	2,730.00
75 +/-	EA	STANDARD MANHOLE CASTINGS, WITH TYPE "A" SOLID LID. * IF GASKET REQUIRED ADD 4.25 EA.	98.70	7,402.50
		FOR ADDITIONAL INFORMATION CONTACT: JOHN MORAN OR JIM BOYCE (219)427-1255		
		IF YOU DO NO WISH TO QUOTE ON THE ABOVE, PLEASE LIST -NO QUOTE- ON OUR FORM AND RETURN IT IN THE ENCLOSED SELF ADDRESSED ENVELOPE FOR OUR RECORDS. THANK YOU.		

TOTAL PRICE 16,117.50 DELIVERY 2 WEEKS F.O.B. FT. WAYNE

THIS IS ONLY AN INVITATION TO QUOTE AND NOT AN ORDER. THE ABOVE QUOTES ARE SUBMITTED IN ACCORDANCE WITH THE REGULATIONS ON THE REVERSE SIDE OF THIS SHEET.

SIGNATURE OF BIDDER: UNDERGROUND PIPE & VALVE DATE: 3/20/87

VENDOR 2

CATCH BASIN CASTING WITH BACK

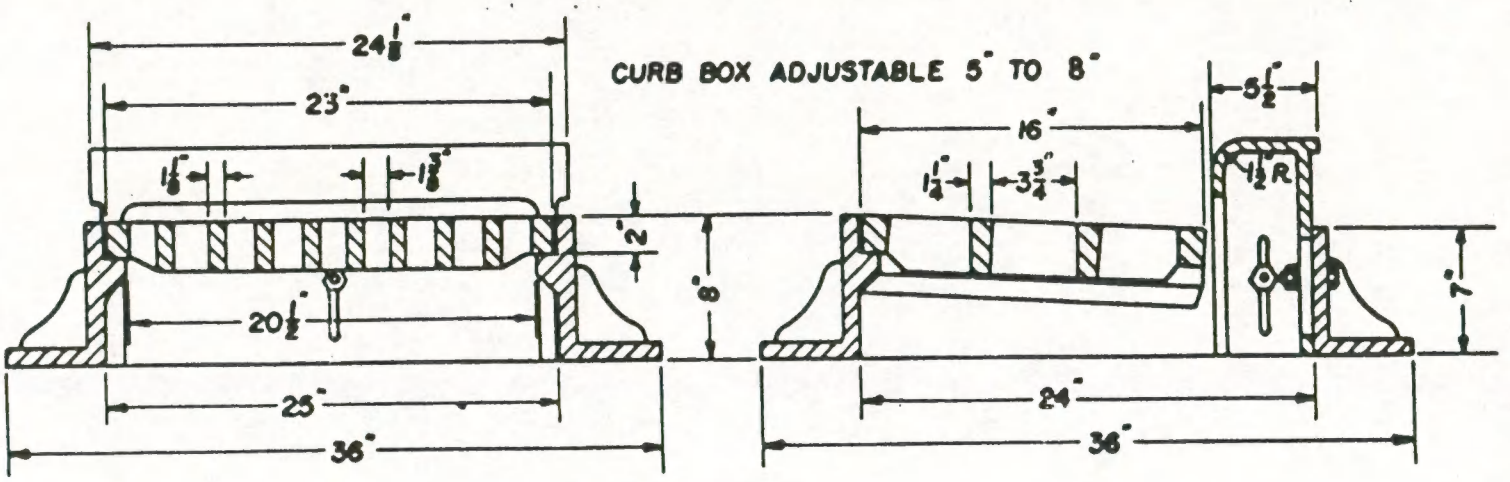

Approximately 385 lbs.

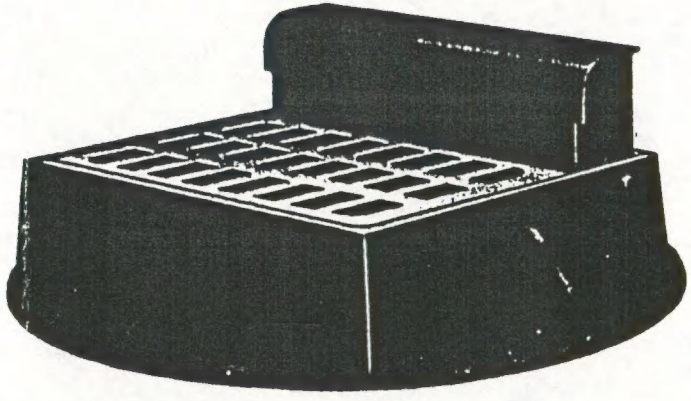

Quoted

East Jordan 7010 w/M1 Grate

2.7 WATERPROOF MANHOLE FRAME W/BOLTED LID AND GASKETS-TYPE "J"

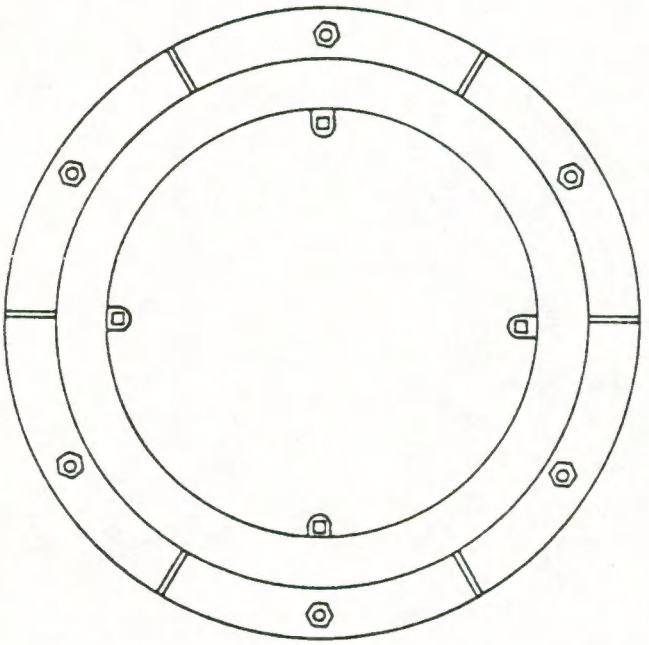

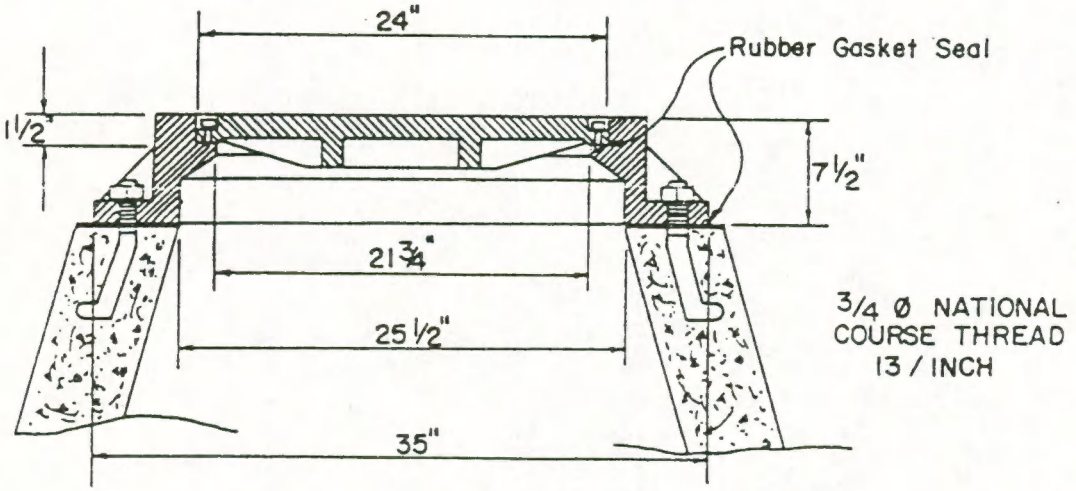

NOTE: ALL BEARING SURFACES TO BE MACHINED

Quoted
East Jordan 1120Z PT

DIVISION IV — CONSTRUCTION STANDARDS
SECTION 2. — CASTINGS
2.1 STANDARD CASTING DETAIL

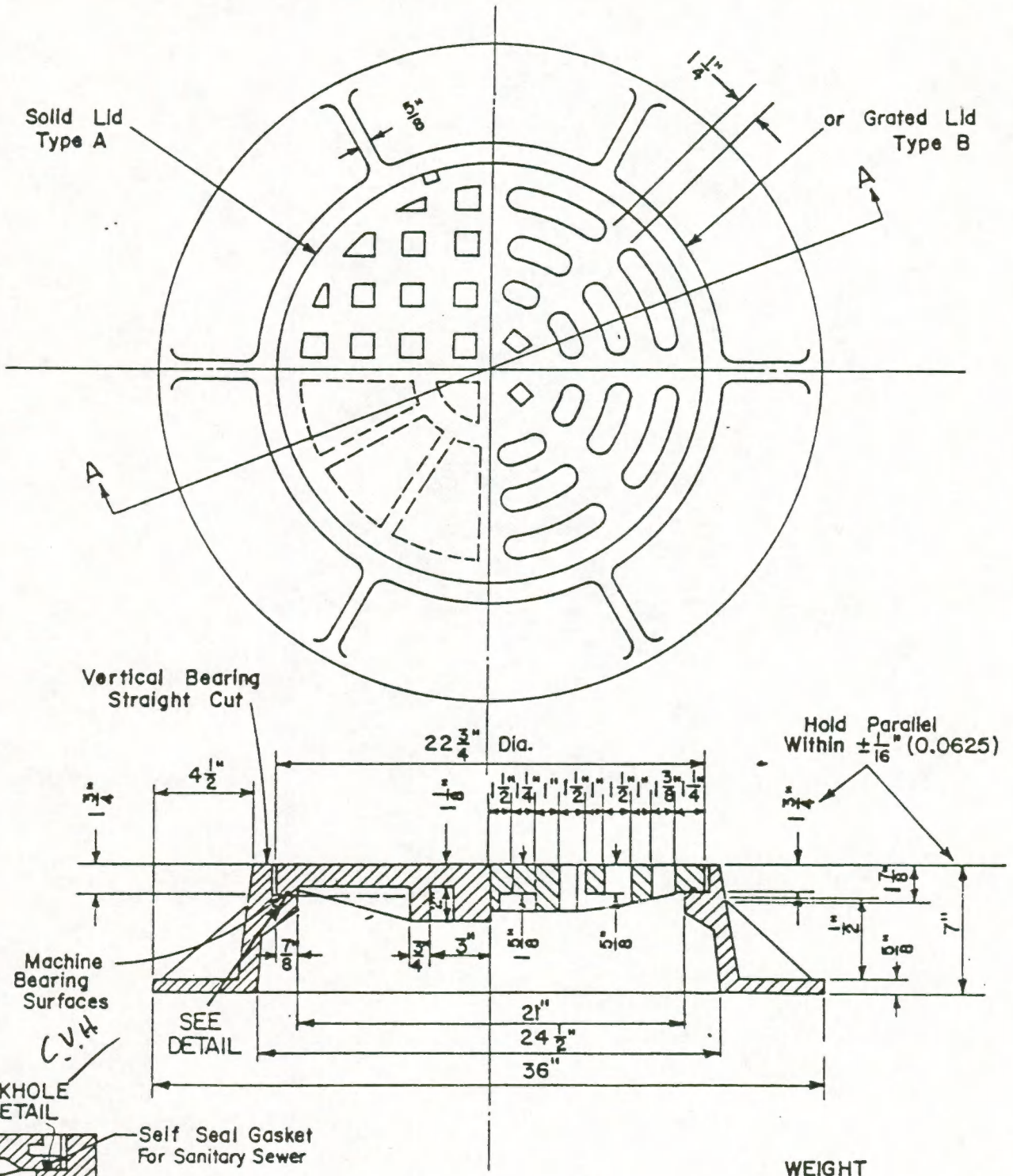

WEIGHT	
Frame	262 lbs.
Lid	138 lbs.
Total	400 lbs.

or Approved Equal

Quoted
East Jordan 1875 Z3
w/Type A Solid Cover.

City of Fort Wayne
DEPARTMENT OF PURCHASES
NUMBER ONE EAST MAIN STREET ROOM 940
FORT WAYNE, IN 46802

PLEASE INDICATE THIS NUMBER ON ALL CORRESPONDENCE.

QUOTE NO: 03079

DATE OF REQUEST		WILL BE RECEIVED AT THIS OFFICE UNTIL	PAGE
03/06/87	☒ Quotations ☐ Sealed Bids	▶ 03/20/87 AT 4:00 PM	

TO

TREATY COMPANY
4020 N. WELLS STREET
FORT WAYNE, IN 46808

[redacted]

The Contractor and his sub-contractors, if any, shall not discriminate against any employee or applicant for employment, to be employed in the performance of this contract, with respect to his hire, tenure, conditions or privileges of employment or any matter directly or indirectly related to employment, because of his race, color, religion, national origin or ancestry. Breach of this covenant may be regarded as a material breach of the contract.

REQUEST FOR QUOTATION
THIS IS NOT AN ORDER

PLEASE QUOTE BELOW LOWEST PRICES, WHICH **MUST** INCLUDE ALL DELIVERY CHARGES **(INCLUDING FREIGHT, PARCEL POST AND EXPRESS)** UNLESS OTHERWISE SPECIFIED, FOR PURCHASING MERCHANDISE OR SERVICE DESCRIBED BELOW.

QUOTATIONS WILL BE OPENED IN ACCORDANCE TO RULES AND REGULATIONS ON THE REVERSE SIDE OF THIS SHEET.

RESPECTFULLY, D. Offerle

QUANTITY	UNIT	DESCRIPTION	UNIT PRICE	TOTAL
		PER THE ATTACHED SPECIFICATIONS, PLEASE QUOTE ON THE MATERIAL FOR THE WATER POLLUTION CONTROL MAINTENANCE DEPARTMENT.		
		THIS IS CONSIDERED A SEALED QUOTE. IT MUST BE RETURNED SEALED IN THE ENVELOPE ENCLOSED NO LATER THAN THE DATE AND TIME SPECIFIED ABOVE. ALL OTHERS WILL BE RETURNED UNOPENED TO SENDER.		
50 +/-	EA	CATCH BASIN CASTINGS WITH BACK 7010	120.05 each	6,002.50
25 +/-	EA	BOLT DOWN, MANHOLE CASTINGS 1120	109.52 each	2,738.00
75 +/-	EA	STANDARD MANHOLE CASTINGS, WITH TYPE "A" SOLID LID. 1875 CVH w A Solid Lid	98.99 each	7,424.25
		Add on for gasket on 1875 CVH	4.22 each	316.50
		FOR ADDITIONAL INFORMATION CONTACT: JOHN MORAN OR JIM BOYCE (219)427-1255		
		IF YOU DO NO WISH TO QUOTE ON THE ABOVE, PLEASE LIST -NO QUOTE- ON OUR FORM AND RETURN IT IN THE ENCLOSED SELF ADDRESSED ENVELOPE FOR OUR RECORDS. THANK YOU.		

TOTAL PRICE 16,481.25 DELIVERY 30 days F.O.B. Ft. Wayne

THIS IS ONLY AN INVITATION TO QUOTE AND NOT AN ORDER. THE ABOVE QUOTES ARE SUBMITTED IN ACCORDANCE WITH THE REGULATIONS IN THE REVERSE SIDE OF THIS SHEET.

SIGNATURE OF BIDDER: Eric W Lyttle DATE:

VENDOR 2

City of Fort Wayne

DEPARTMENT OF PURCHASES

NUMBER ONE EAST MAIN STREET ROOM 940
FORT WAYNE, IN 46802

PLEASE INDICATE THIS NUMBER ON ALL CORRESPONDENCE.

QUOTE NO: 03079

DATE OF REQUEST: 03/06/87

☒ Quotations ☐ Sealed Bids

WILL BE RECEIVED AT THIS OFFICE UNTIL ▶ 03/20/87 AT 4:00 PM

PAGE

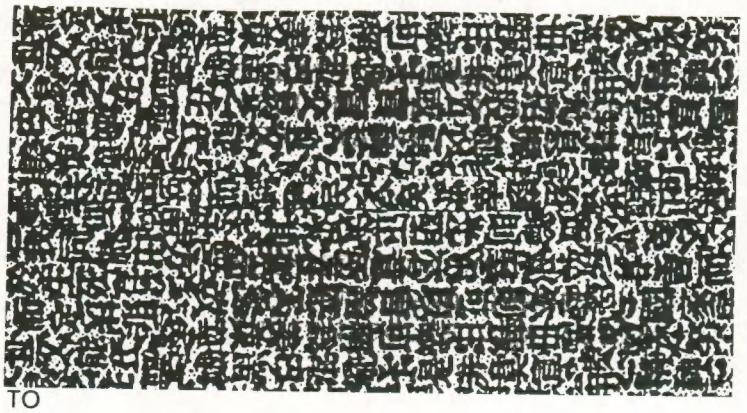

TO

MIDWEST TILE AND CONCRETE
R.R. #2
WOODBURN, IN 46797

The Contractor and his sub-contractors, if any, shall not discriminate against any employee or applicant for employment, to be employed in the performance of this contract, with respect to his hire, tenure, conditions or privileges of employment or any matter directly or indirectly related to employment, because of his race, color, religion, national origin or ancestry. Breach of this covenant may be regarded as a material breach of the contract.

REQUEST FOR QUOTATION
THIS IS NOT AN ORDER

PLEASE QUOTE BELOW LOWEST PRICES, WHICH **MUST** INCLUDE ALL DELIVERY CHARGES **(INCLUDING FREIGHT, PARCEL POST AND EXPRESS)** UNLESS OTHERWISE SPECIFIED, FOR PURCHASING MERCHANDISE OR SERVICE DESCRIBED BELOW.

QUOTATIONS WILL BE OPENED IN ACCORDANCE TO RULES AND REGULATIONS ON THE REVERSE SIDE OF THIS SHEET.
RESPECTFULLY,

QUANTITY	UNIT	DESCRIPTION	UNIT PRICE	TOTAL
		PER THE ATTACHED SPECIFICATIONS, PLEASE QUOTE ON THE MATERIAL FOR THE WATER POLLUTION CONTROL MAINTENANCE DEPARTMENT.		
		THIS IS CONSIDERED A SEALED QUOTE. IT MUST BE RETURNED SEALED IN THE ENVELOPE ENCLOSED NO LATER THAN THE DATE AND TIME SPECIFIED ABOVE. ALL OTHERS WILL BE RETURNED UNOPENED TO SENDER.		
50 +/-	EA	CATCH BASIN CASTINGS WITH BACK	114.40 ea.	
25 +/-	EA	BOLT DOWN, MANHOLE CASTINGS	115.36 ea.	
75 +/-	EA	STANDARD MANHOLE CASTINGS, WITH TYPE "A" SOLID LID.	103.00 ea.	
		FOR ADDITIONAL INFORMATION CONTACT: JOHN MORAN OR JIM BOYCE (219)427-1255		
		IF YOU DO NO WISH TO QUOTE ON THE ABOVE, PLEASE LIST -NO QUOTE- ON OUR FORM AND RETURN IT IN THE ENCLOSED SELF ADDRESSED ENVELOPE FOR OUR RECORDS. THANK YOU.		

TOTAL PRICE _____ DELIVERY 2 wks F.O.B. FW

IS ONLY AN INVITATION TO QUOTE AND NOT AN ORDER. THE ABOVE QUOTES ARE SUBMITTED IN ACCORDANCE WITH THE REGULATIONS HE REVERSE SIDE OF THIS SHEET.

SIGNATURE OF BIDDER: Joe Schaffer Secretary DATE: 3-20-87

VENDOR 4

DIGEST SHEET

TITLE OF ORDINANCE: SPECIAL

DEPARTMENT REQUESTING ORDINANCE: PURCHASING

S-87-04-36

SYNOPSIS OF ORDINANCE:

An ordinance approving the award of Reference #3079 for the purchase of Standard Manhole Castings for the Water Pollution Control Maintenance Department.

EFFECT OF PASSAGE:

Castings are needed for resurfacing projects to replace old and damaged castings. They are also used to replace broken castings in the street and easements.

EFFECT OF NON-PASSAGE:

Without the castings there would be holes in the street causing traffic problems and danger to citizens.

MONEY INVOLVED (Direct costs, Expenditures, Savings):

Midwest Tile and Concrete $16,329.00 +/-

ASSIGNED TO COMMITTE (President):

BILL NO. S-87-04-36

REPORT OF THE COMMITTEE ON CITY UTILITIES

WE, YOUR COMMITTEE ON CITY UTILITIES TO WHOM WAS REFERRED AN (ORDINANCE) ~~(RESOLUTION)~~ approving the awarding of Reference #3079, by the City of Fort Wayne, Indiana, by and through its Department of Purchasing and Midwest Tile and Concrete, for the Water Pollution Control Maintenance Department

HAVE HAD SAID (ORDINANCE) ~~(RESOLUTION)~~ UNDER CONSIDERATION AND BEG LEAVE TO REPORT BACK TO THE COMMON COUNCIL THAT SAID (ORDINANCE) ~~(RESOLUTION)~~

YES		NO
Charles B. Redd	CHARLES B. REDD CHAIRMAN	
	PAUL M. BURNS VICE CHAIRMAN	
	THOMAS C. HENRY	
Ben A. Eisbart	BEN A. EISBART	
Samuel J. Talarico	SAMUEL J. TALARICO	

CONCURRED IN 4-28-87.

SANDRA E. KENNEDY
CITY CLERK